Dimensions

Dimension: inch [mm]

HGL Fixed Type 800 ~ 2,000 A (HGL08 K Frame)

Front

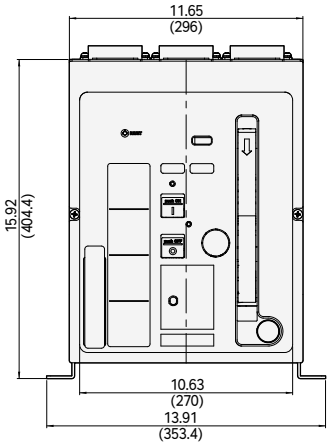

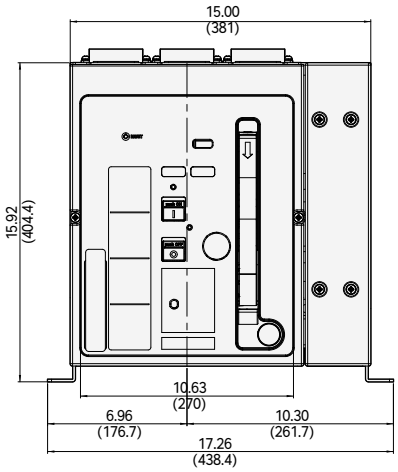

Vertical Type

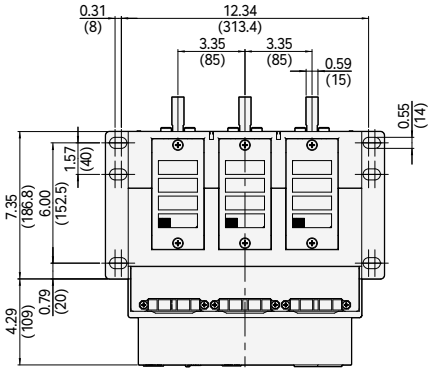

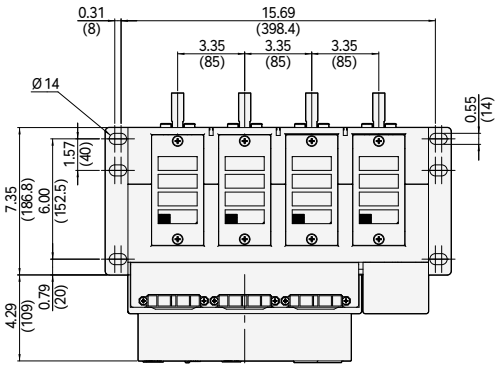

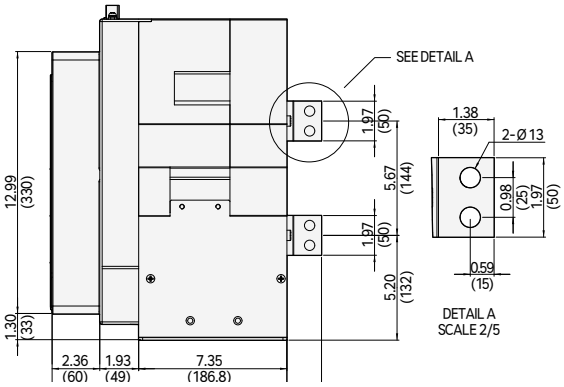

※ The drawing dimension of this page may be subject to change without prior notice.

HD HYUNDAI ELECTRIC

Dimensions

Dimension: inch [mm]

HGL Fixed Type 800 ~ 2,000 A (HGL08 K Frame)

Horizontal Type

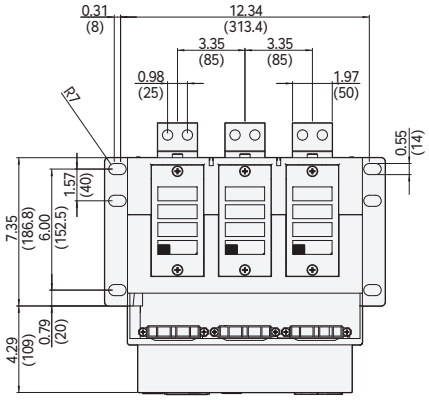

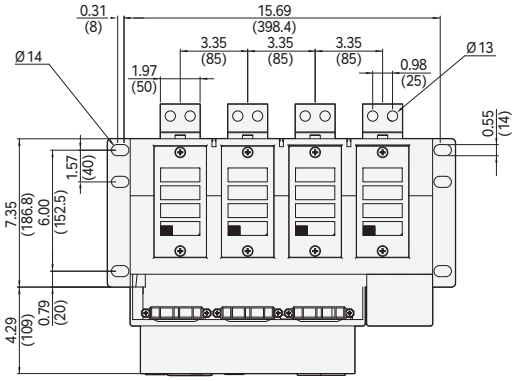

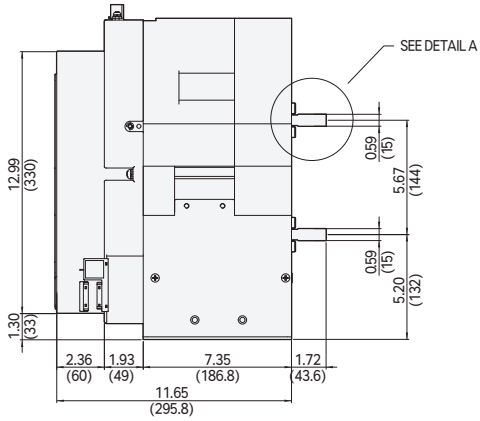

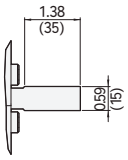

DETAIL A
SCALE 2/5

※ The drawing dimension of this page may be subject to change without prior notice.

HD HYUNDAI ELECTRIC

Dimensions

Dimension: inch [mm]

HGL Draw-Out Type 800 ~ 2,000 A (HGL08 K Frame)

Front

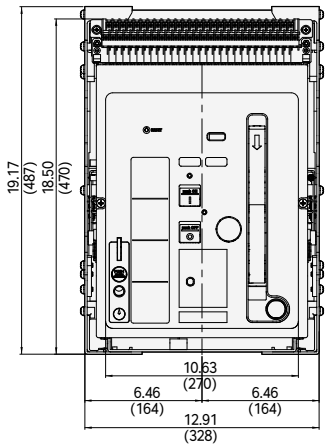

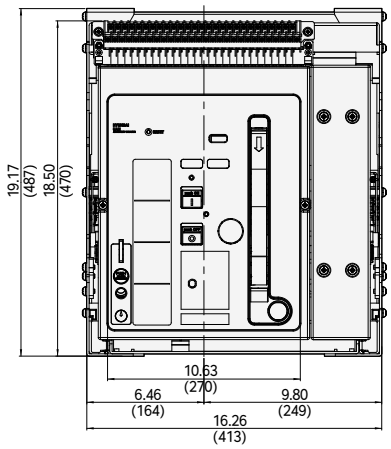

Vertical Type

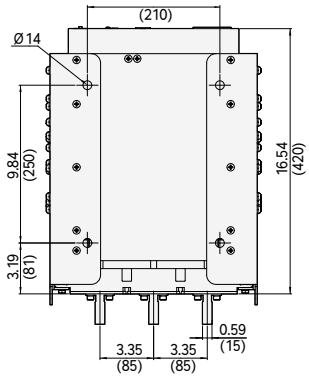

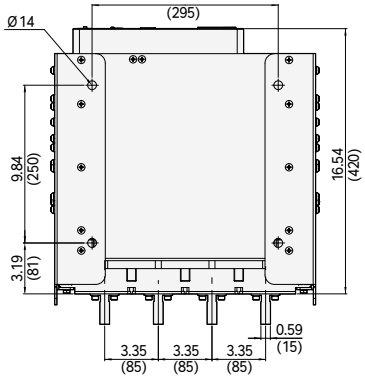

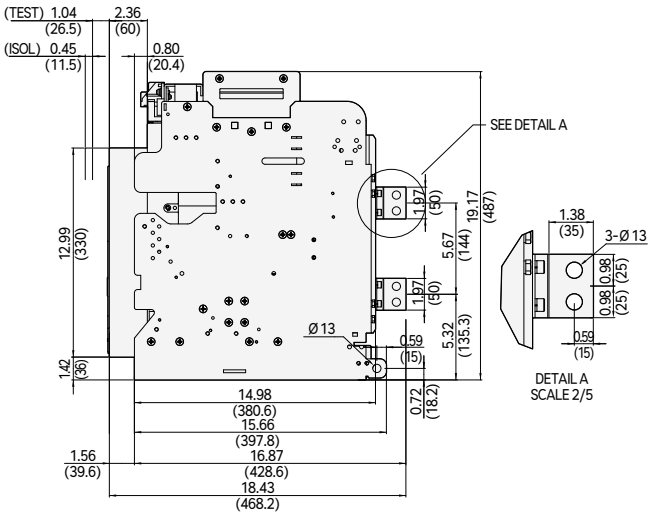

※ The drawing dimension of this page may be subject to change without prior notice.

HYUNDAI ELECTRIC

Dimensions

Dimension: inch [mm]

HGL Draw-Out 800 ~ 2,000 A (HGL08 K Frame)

Horizontal Type

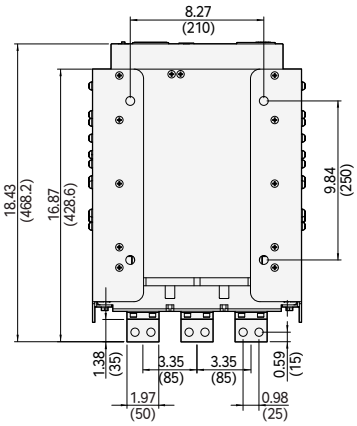

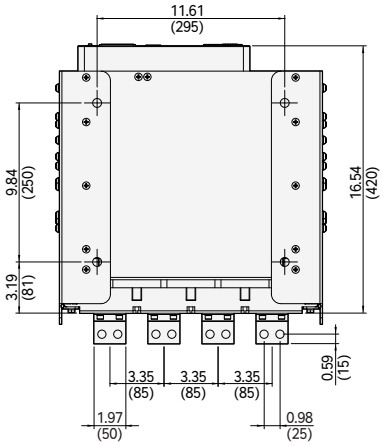

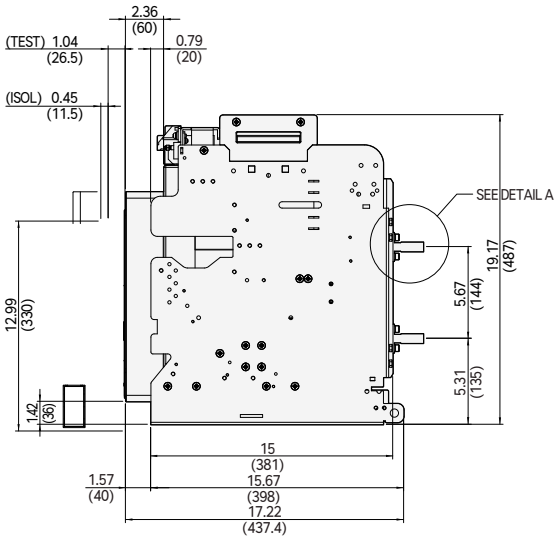

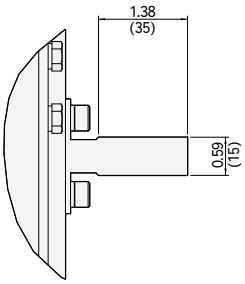

DETAIL A
SCALE 2/5

※ The drawing dimension of this page may be subject to change without prior notice.

HYUNDAI ELECTRIC